T4

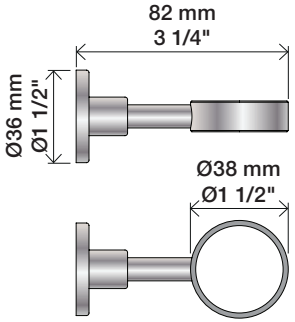

T5

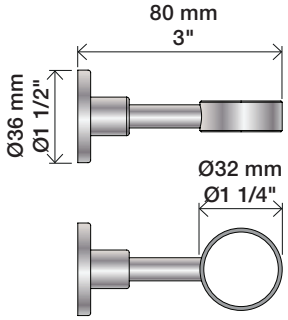

T6

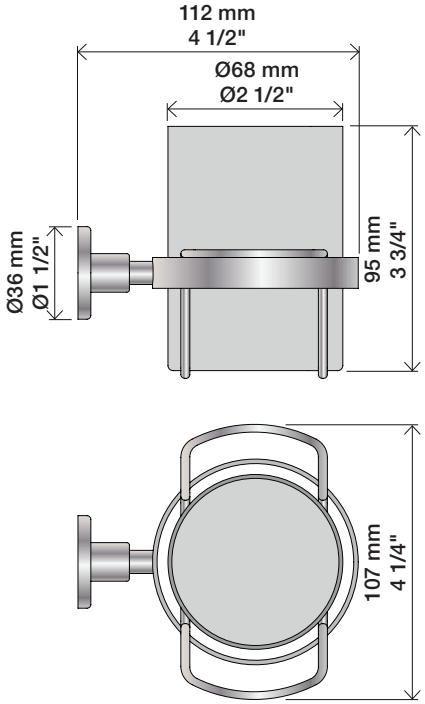

T7

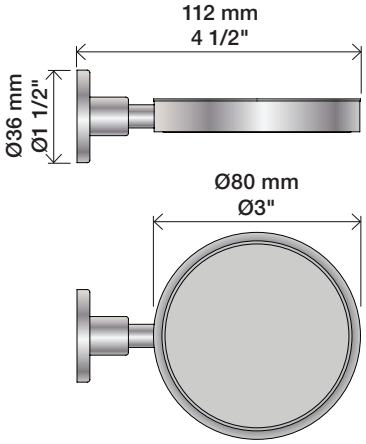

T11

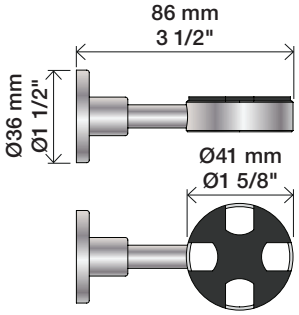

T16

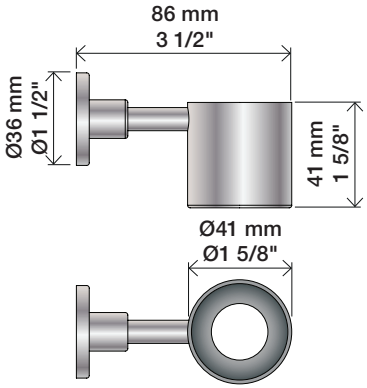

T14

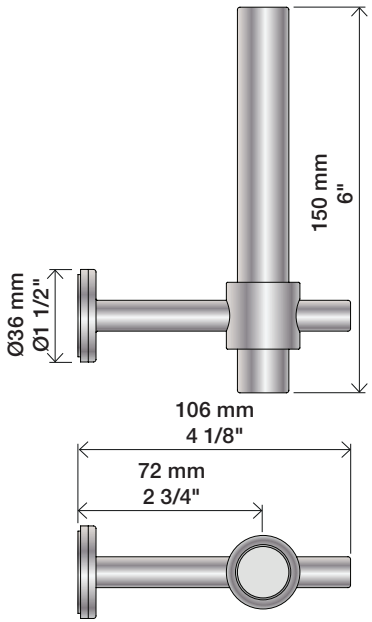

T8

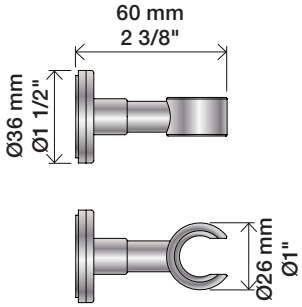

T9

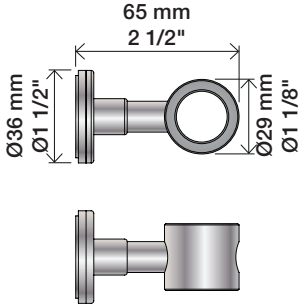

T3

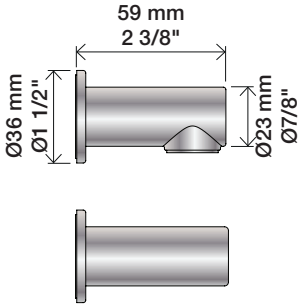

T27

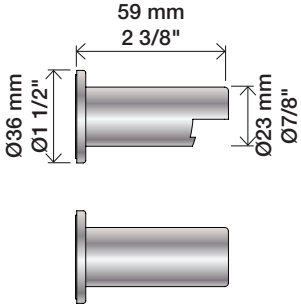

VOLA T3, T4, T5, T6, T7, T8, T9, T11, T14, T16, T27

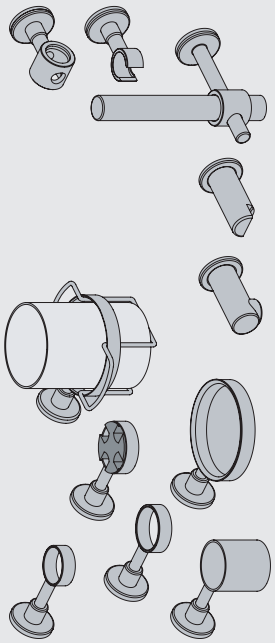

www.vola.com

vola

5 703182 372310

mnt_T3-T27_V3_40999247
01-04-2022

T4, T5, T6, T7, T11, T16, T27

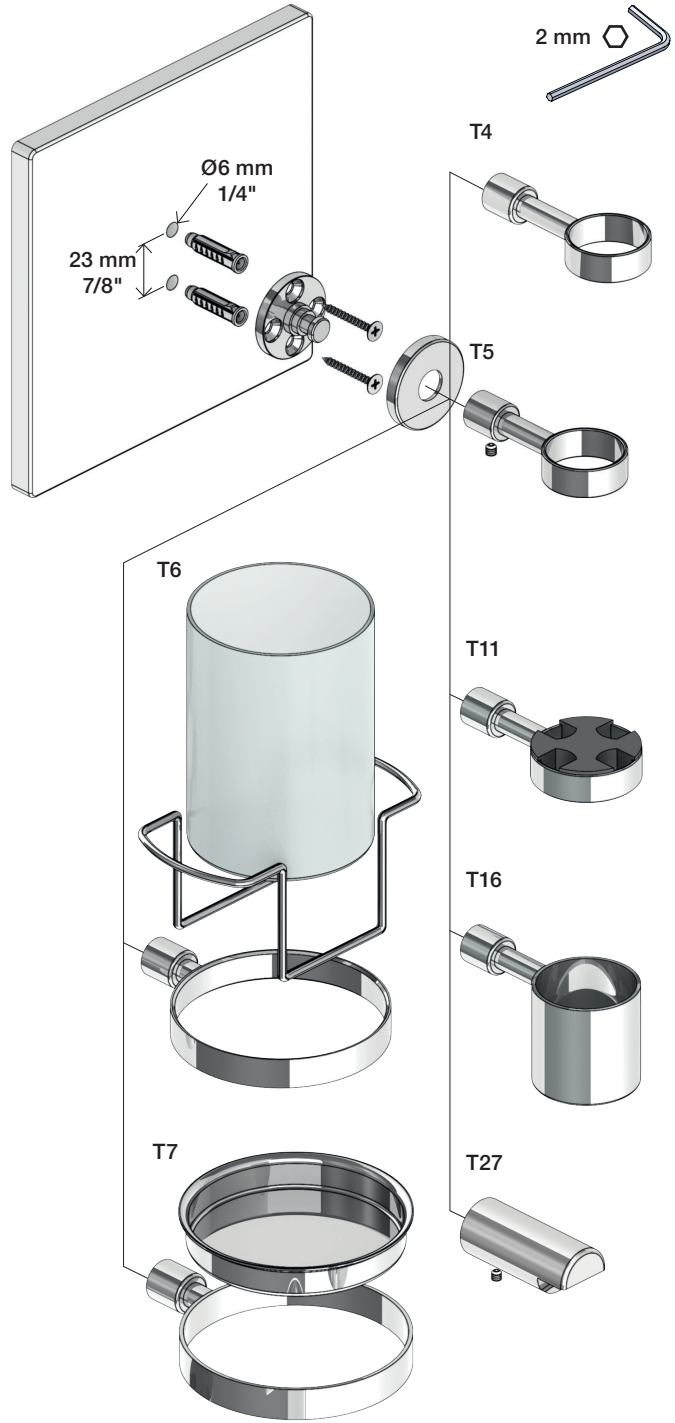

T8, T9, T14

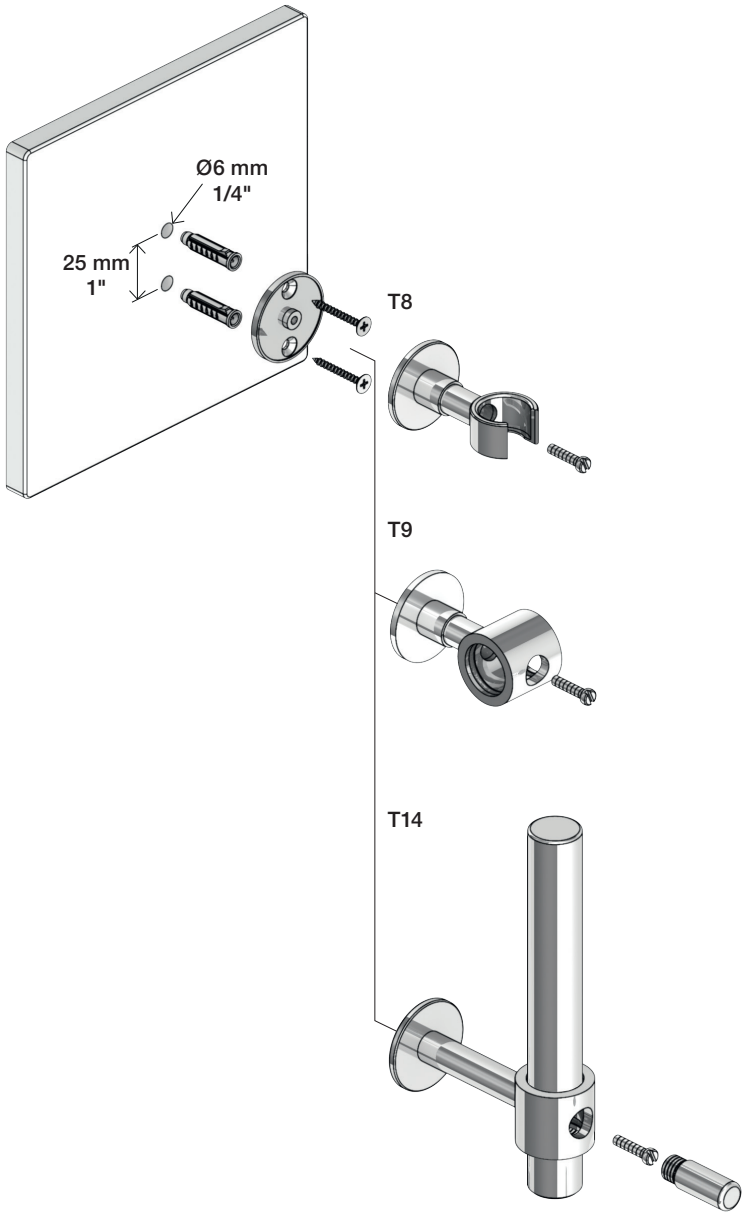

T3

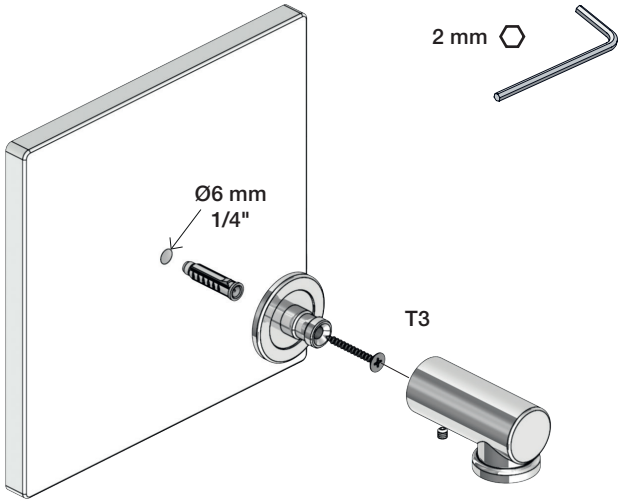

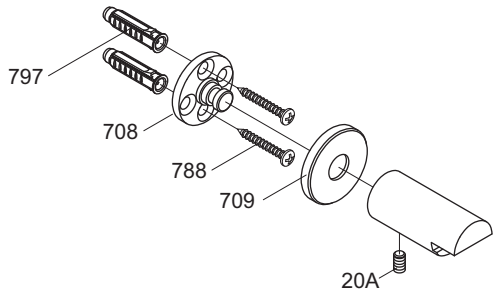

vola
Lunavej 2
DK-8700 Horsens
Tlf : + 45 7023 5500
Fax: + 45 7023 5511
sales@vola.com
www.vola.com

VOLA T27

Date
Jan. 96

Rev.
0

Sheet
SB42.19

T27-SB42.19-R0