VOLA 500, 590, 500T1
VOLA 2500
VOLA SC1, SC3, SC5, SC7, SC9, SC10, SC12

Fitting instruction
Montageanleitung
Monteringsvejledning
Monteringsvägledning
Montage hanleiding
Manuel de montage

GODKENDT
TIL DRIKKEVAND

04/00027
04/00038

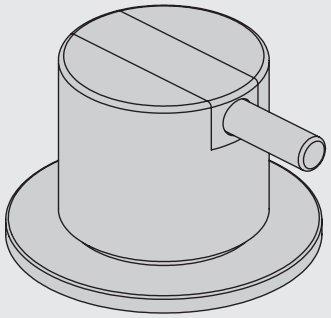

www.vola.com

vola

500 - 2500_V0_40998137
02-10-2023

5 705230 492964

Data, 3 Bar /43.5 Psi:

	l/min.	Gal/min.
500:	14,5	3.8
590:	9,0	2.4
500-T1:	11,0	2.9
2500:	18,7	4.9
SC1:	18,7	4.9
SC5, 7:	18,0	4.8
SC9:	11,0	2.9

Max. 65°C, 150°F

500/2500:

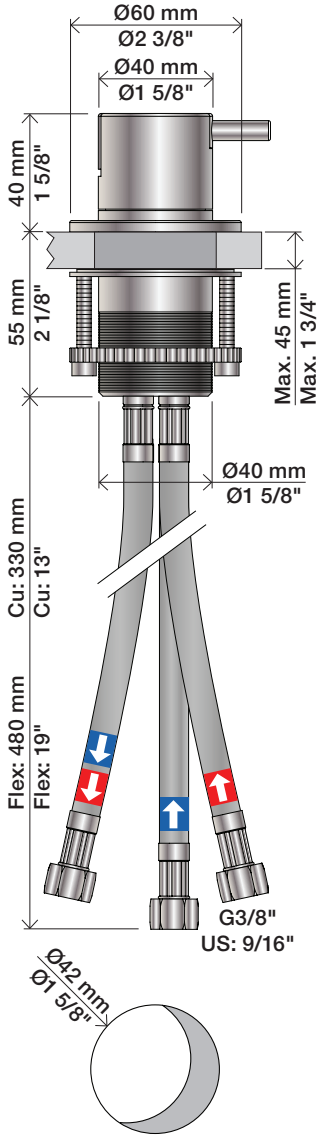

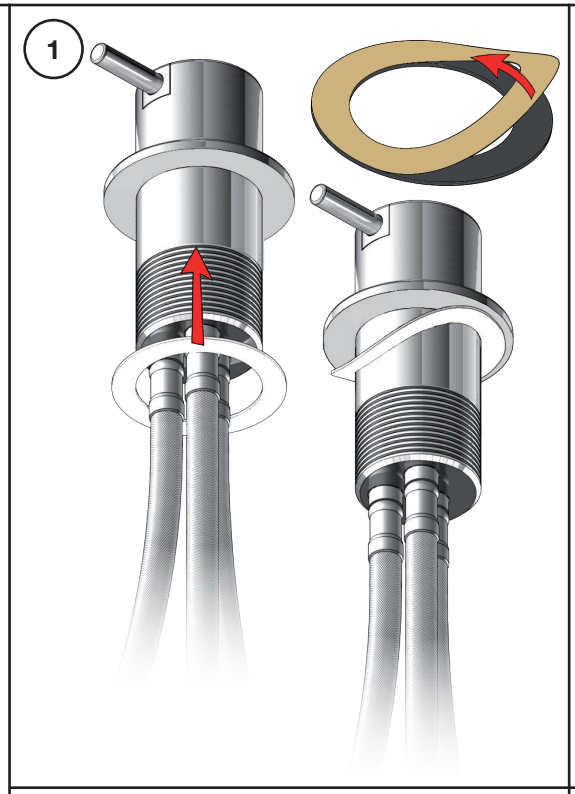

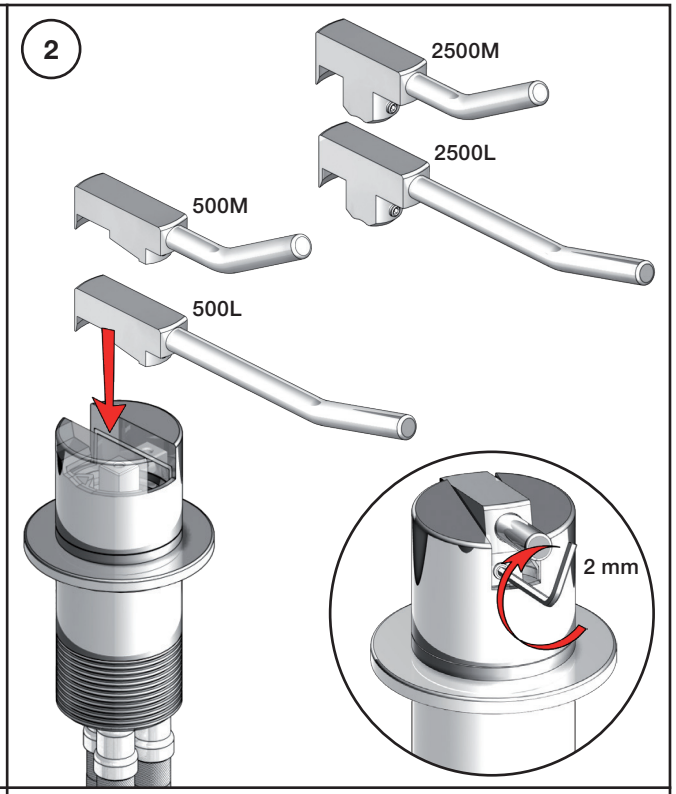

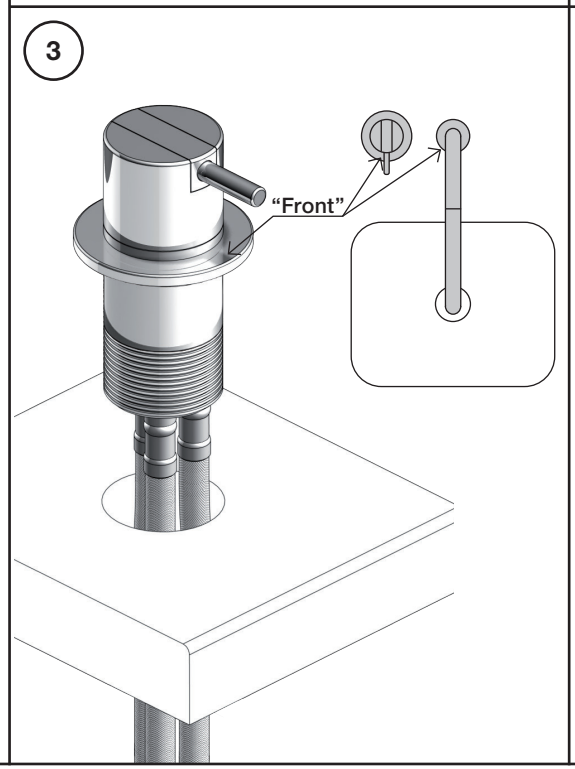

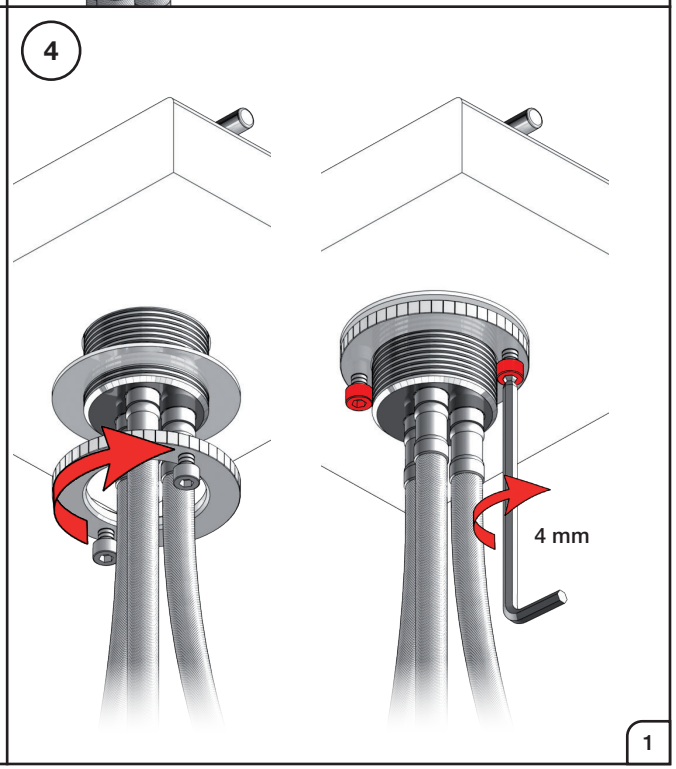

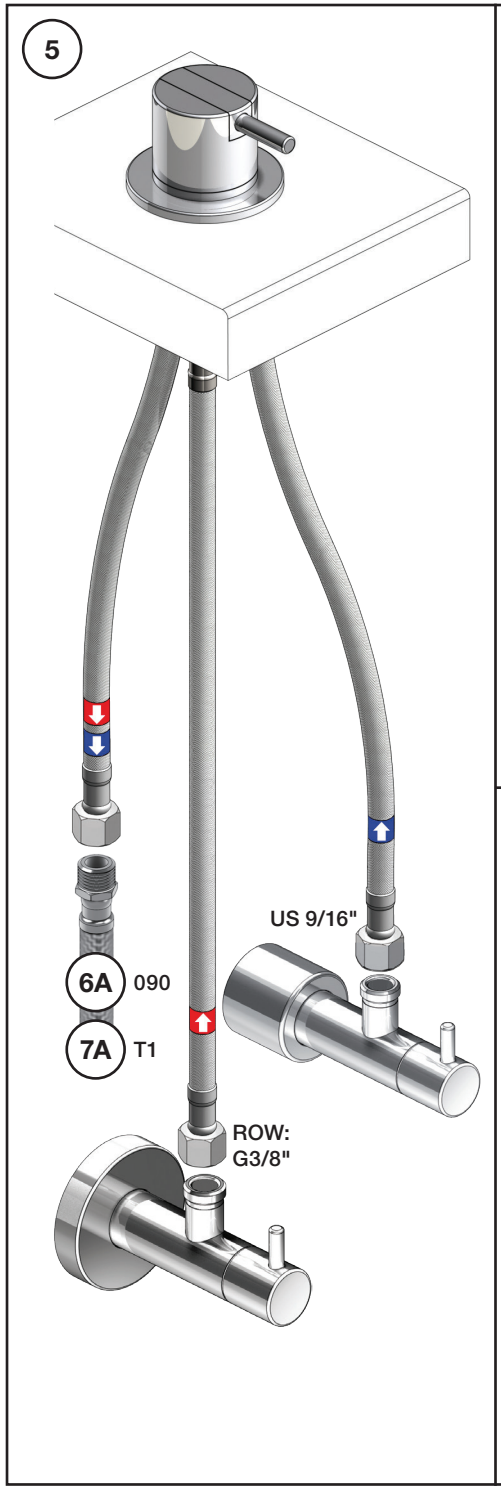

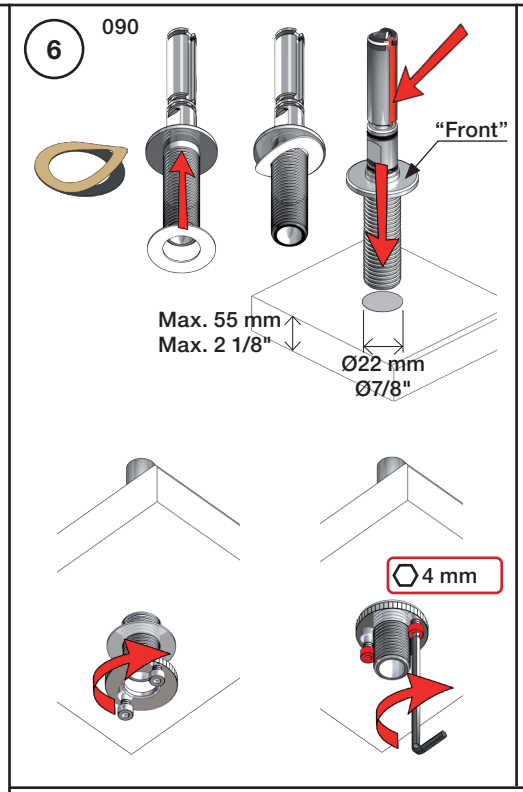

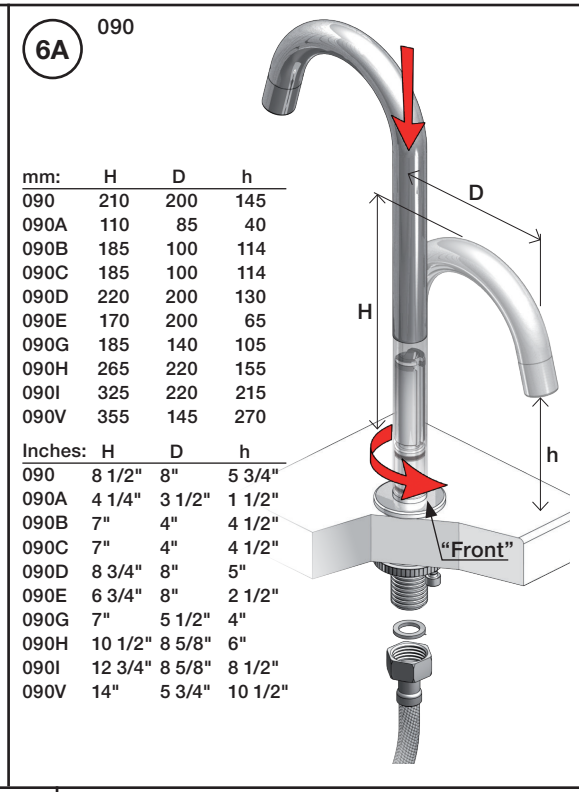

mm:	H	D	h
090	210	200	145
090A	110	85	40
090B	185	100	114
090C	185	100	114
090D	220	200	130
090E	170	200	65
090G	185	140	105
090H	265	220	155
090I	325	220	215
090V	355	145	270

Inches:	H	D	h
090	8 1/2"	8"	5 3/4"
090A	4 1/4"	3 1/2"	1 1/2"
090B	7"	4"	4 1/2"
090C	7"	4"	4 1/2"
090D	8 3/4"	8"	5"
090E	6 3/4"	8"	2 1/2"
090G	7"	5 1/2"	4"
090H	10 1/2"	8 5/8"	6"
090I	12 3/4"	8 5/8"	8 1/2"
090V	14"	5 3/4"	10 1/2"

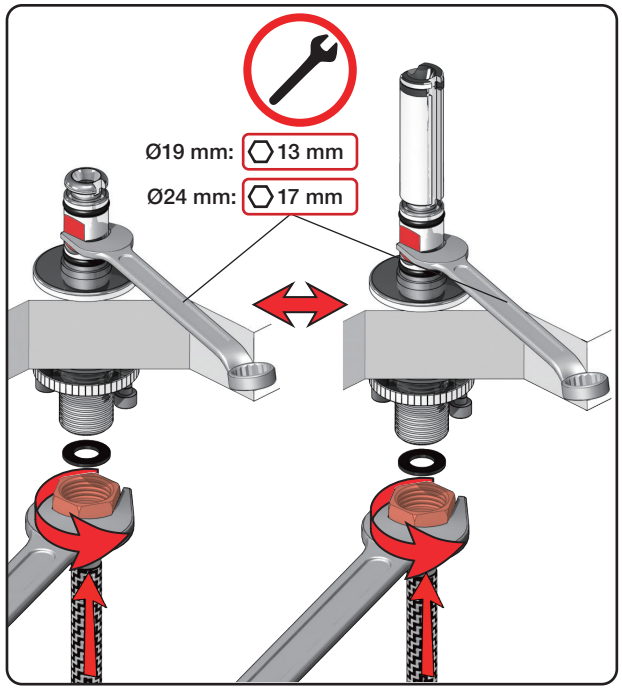

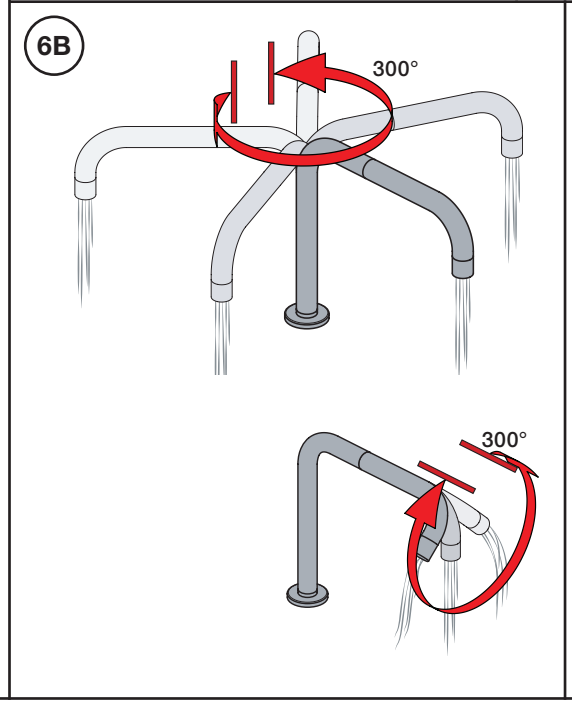

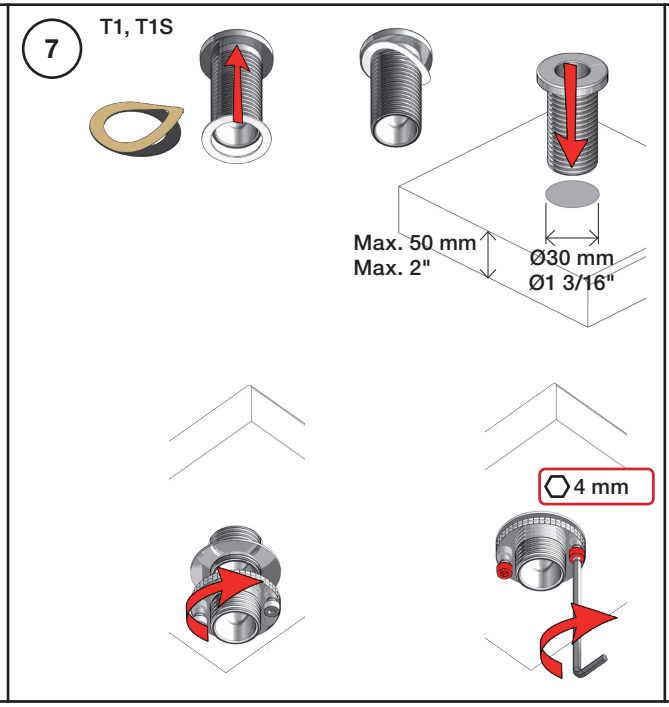

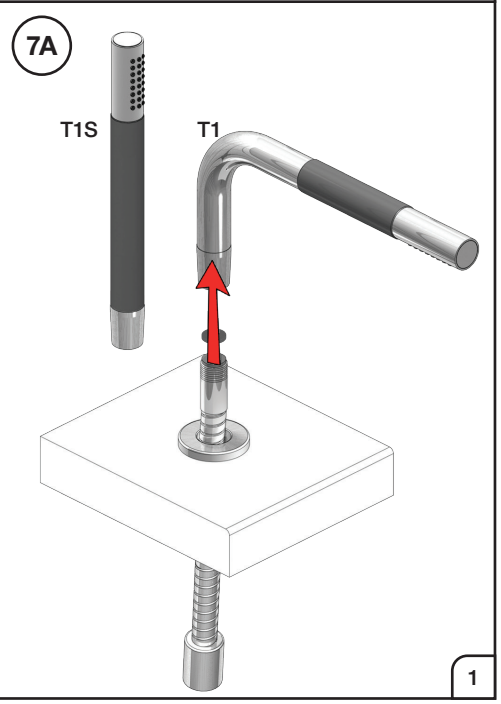

VOLA A/S • Lunavej 2 • DK-8700 Horsens • Tel. +45 7023 5500 • Fax +45 7023 5511 • sales@vola.dk • www.vola.com

VOLA 090, 090A, 090B:
VOLA 090C, 090D, 090E:
VOLA 090G, 090H, 090I, 090V:

1 - 4

VOLA 090FM:

5

Fitting instruction
Montageanleitung
Monteringsvejledning

Monteringsvägledning
Montage hanleiding
Manuel de montage

GODKENDT
TIL DRIKKEVAND

04/00045
04/00109

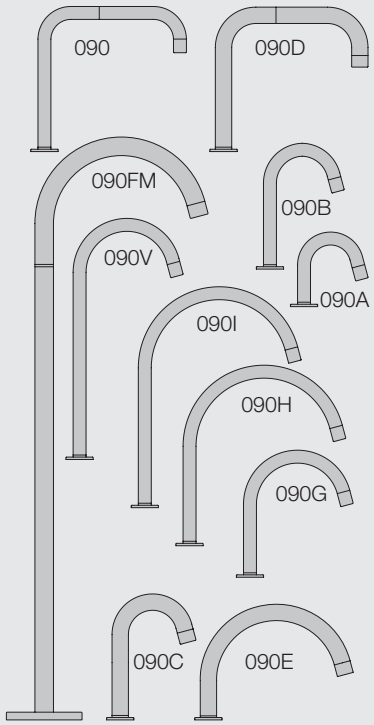

www.vola.com

vola

mnt_090_V4_40999824
21-11-2023

5 703182 372365

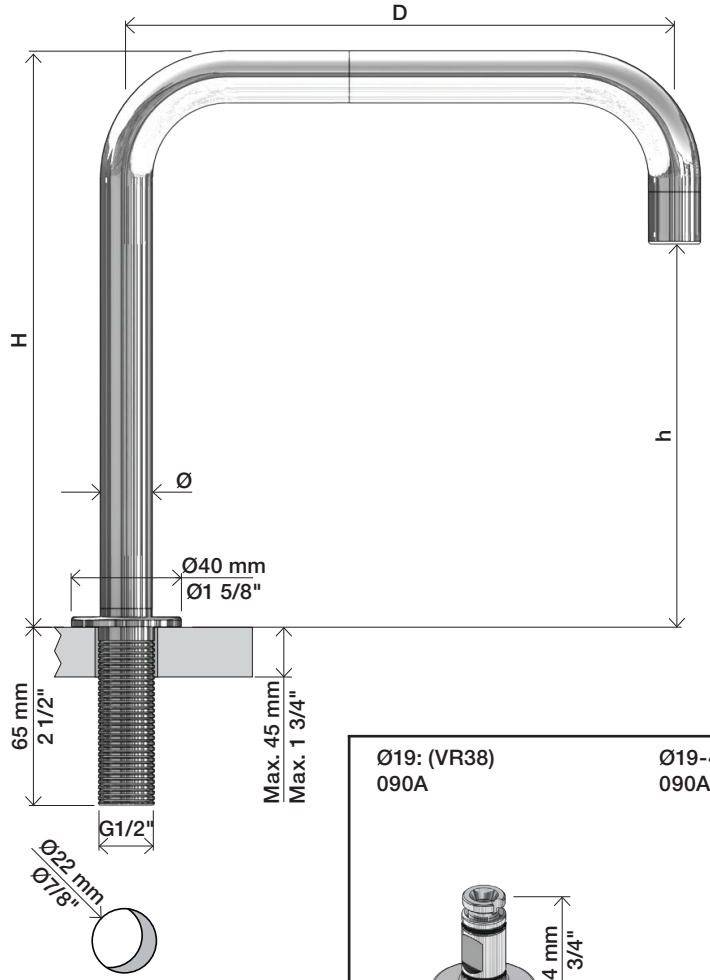

mm:	Ø	H	D	h
090	19	210	200	145
090A	19	110	85	40
090B	19	185	100	114
090C	24	185	100	114
090D	24	220	200	130
090E	24	170	200	65
090G	19	185	140	105
090H	19	265	220	155
090I	19	325	220	215
090V	19	355	145	270

Inches:	Ø	H	D	h
090	3/4"	8 1/4"	8"	5 3/4"
090A	3/4"	4 1/4"	3 1/2"	1 1/2"
090B	3/4"	7"	4"	4 1/2"
090C	1"	7"	4"	4 1/2"
090D	1"	8 3/4"	8"	5"
090E	1"	6 3/4"	8"	2 1/2"
090G	3/4"	7"	5 1/2"	4"
090H	3/4"	10 1/2"	8 5/8"	6"
090I	3/4"	12 3/4"	8 5/8"	8 1/2"
090V	3/4"	14"	5 3/4"	10 1/2"

Ø19: (VR38)
090A

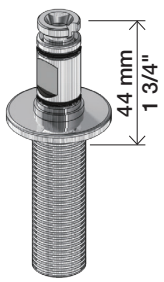

Ø19-40: (VR38A)
090A

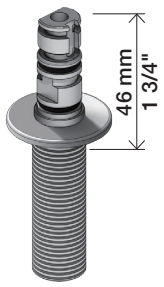

Ø19: (VR38L)
090
090B
090G
090H
090I
090V

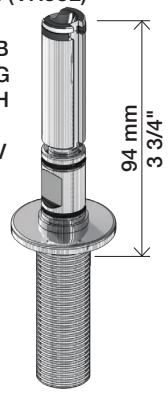

Ø19-40: (VR38)
090
090B
090G
090H
090I
090V

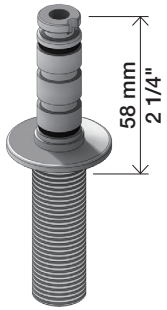

Ø24: (VR638)
090C
090D
090E

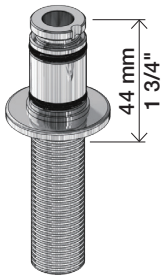

Ø24-40: (VR633)
090C
090D
090E

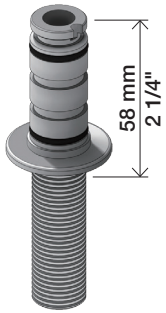

1

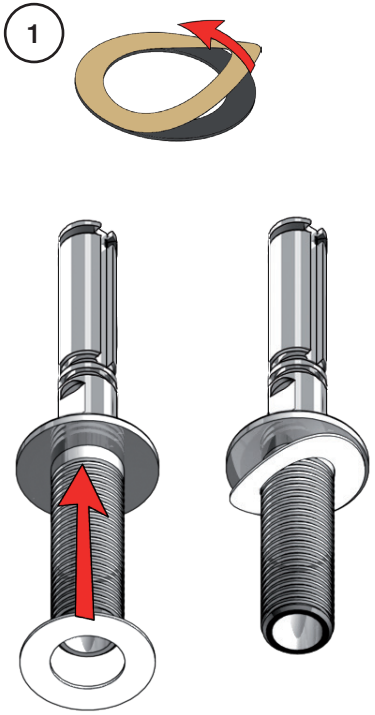

2

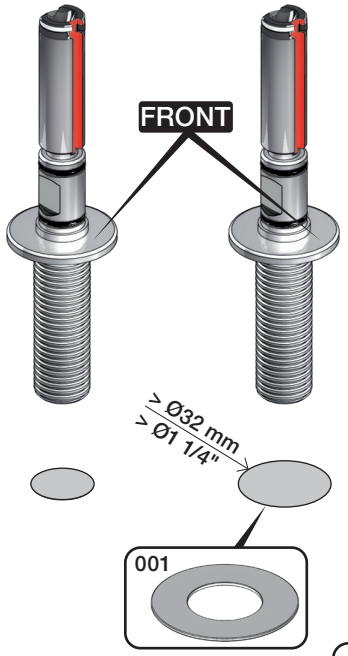

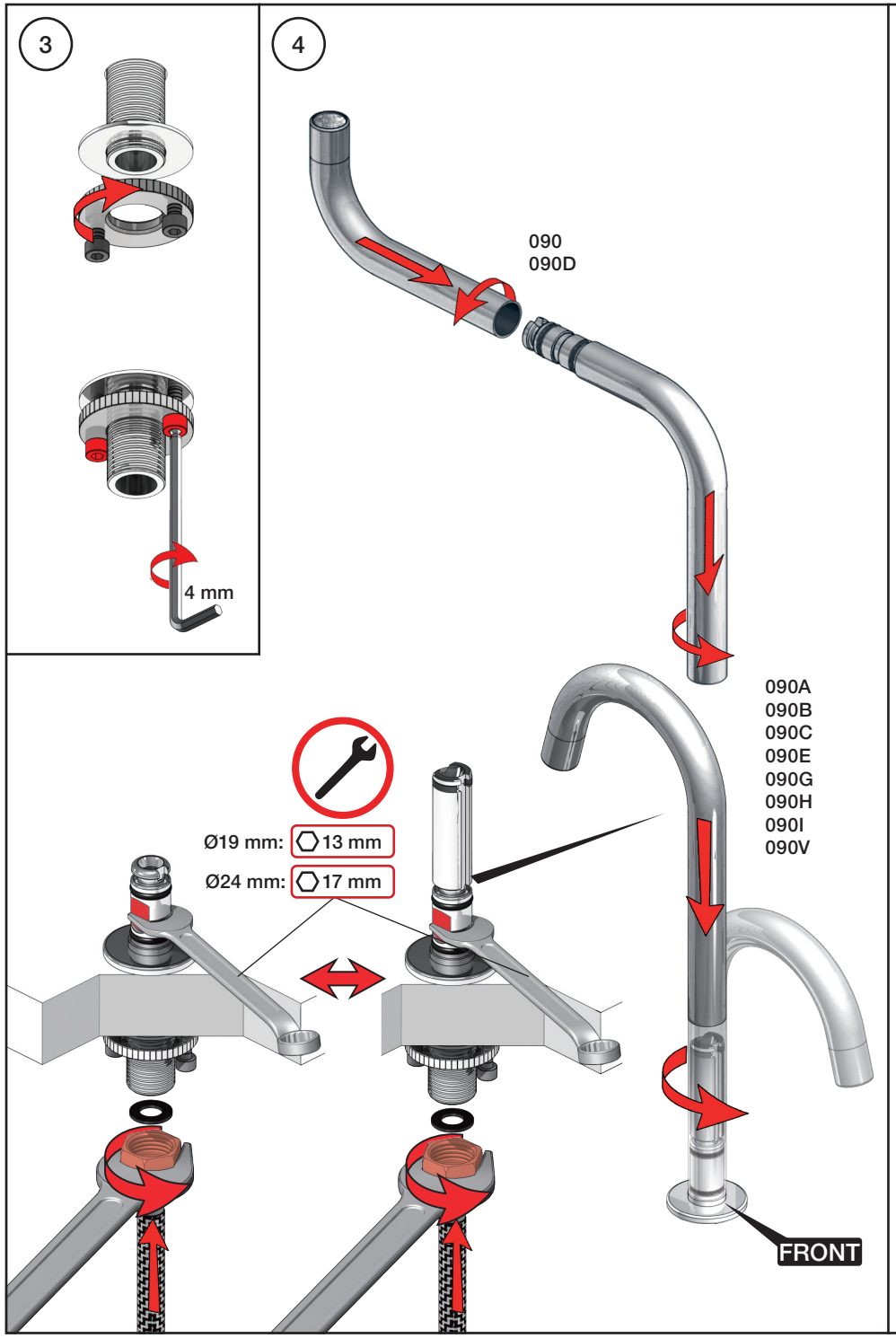

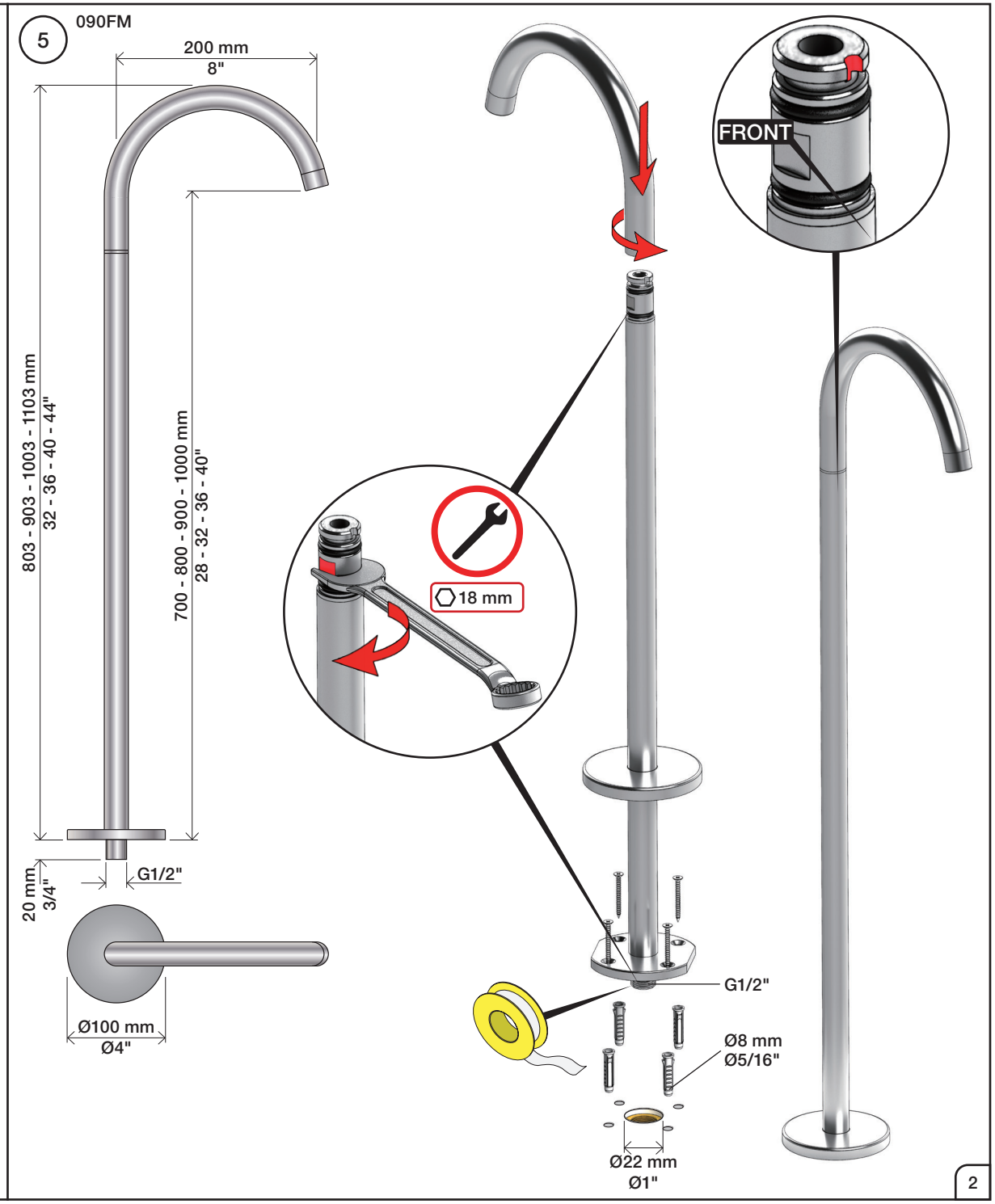

VOLA A/S • Lunavej 2 • DK-8700 Horsens • Tel. +45 7023 5500 • sales@vola.dk • www.vola.com

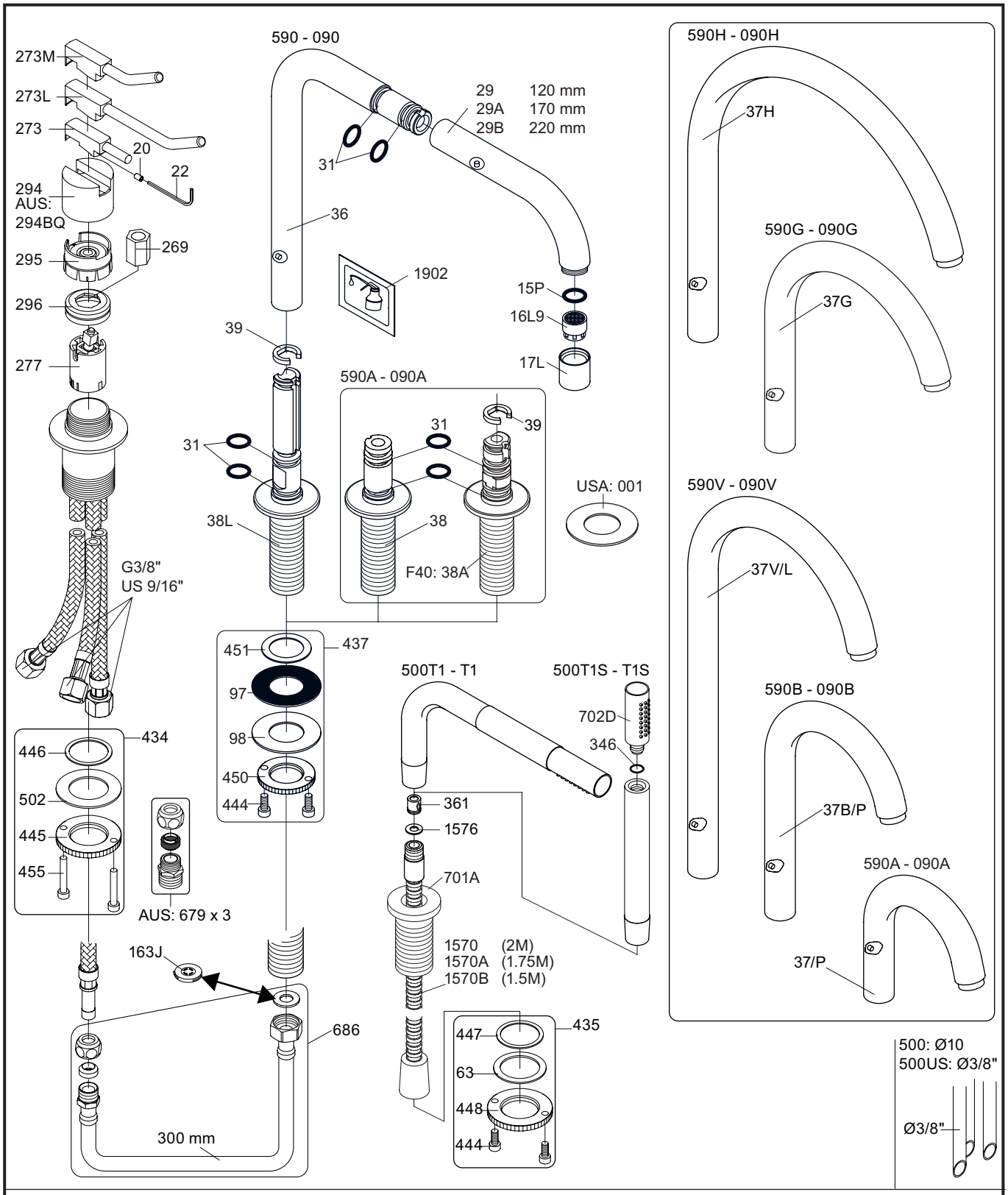

VR277K: VR22, VR269, VR277
VR297: VR20, VR22, VR269, VR273, VR277, VR294, VR295, VR296
VR434: VR445, VR446, 2xVR455, VR502
VR437: VR97, VR98, 2xVR444, VR450, VR451
NR.10: VR20, VR22, VR273, VR294, VR295
VR090: VR15P, VR16L9

vola
Lunavej 2
DK-8700 Horsens
Tlf : + 45 7023 5500
sales@vola.com
www.vola.com

VOLA 590 AII
VOLA 500T1/SC9
VOLA 500T1S

Date
Feb. 23

Rev.
5

Sheet
SB 27.72

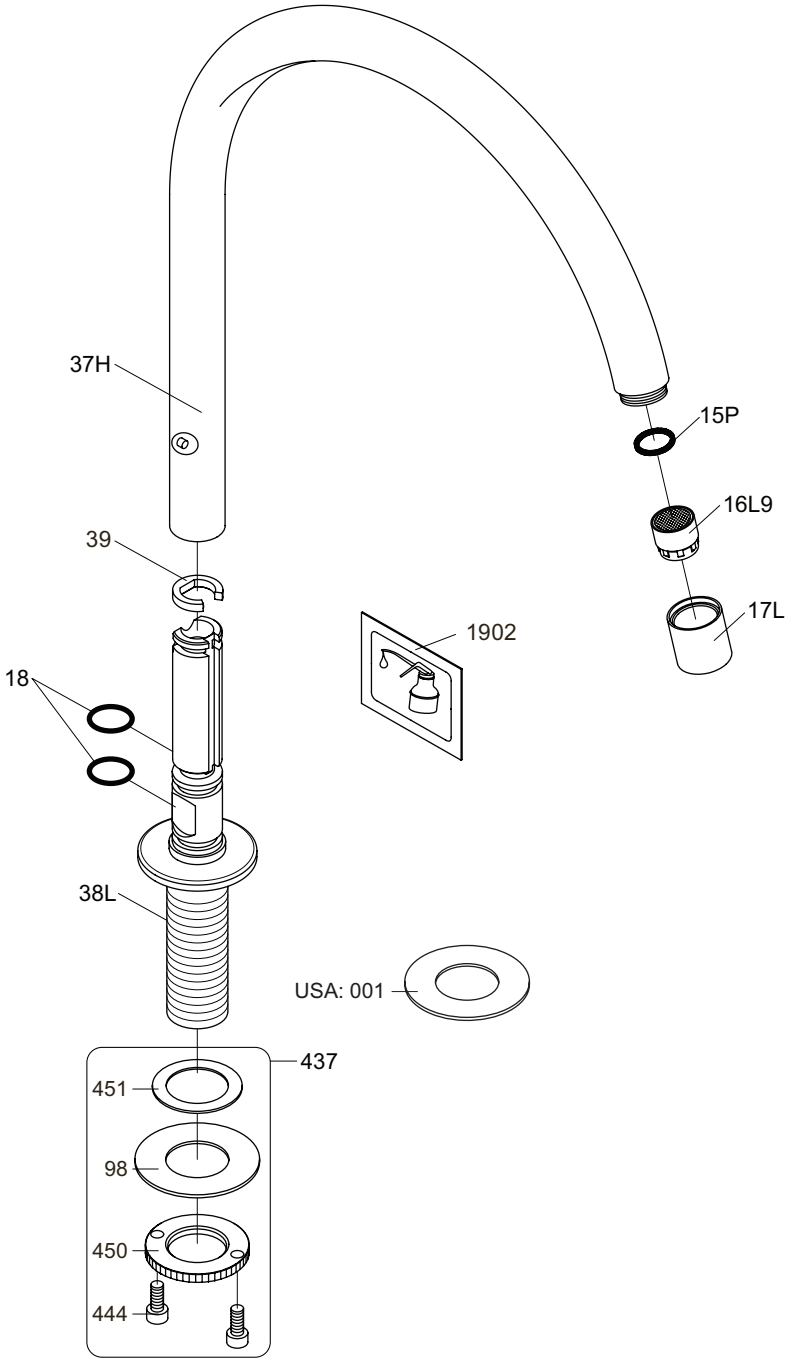

VR17L9K: VR15P, VR16L9, VR17L
VR437: VR98, 2xVR444, VR450, VR451

vola
Lunavej 2
DK-8700 Horsens
Tlf : + 45 7023 5500
sales@vola.com
www.vola.com

VOLA 090H

Date
Apr. 12

Rev.
3

Sheet
SB 19.4

500:

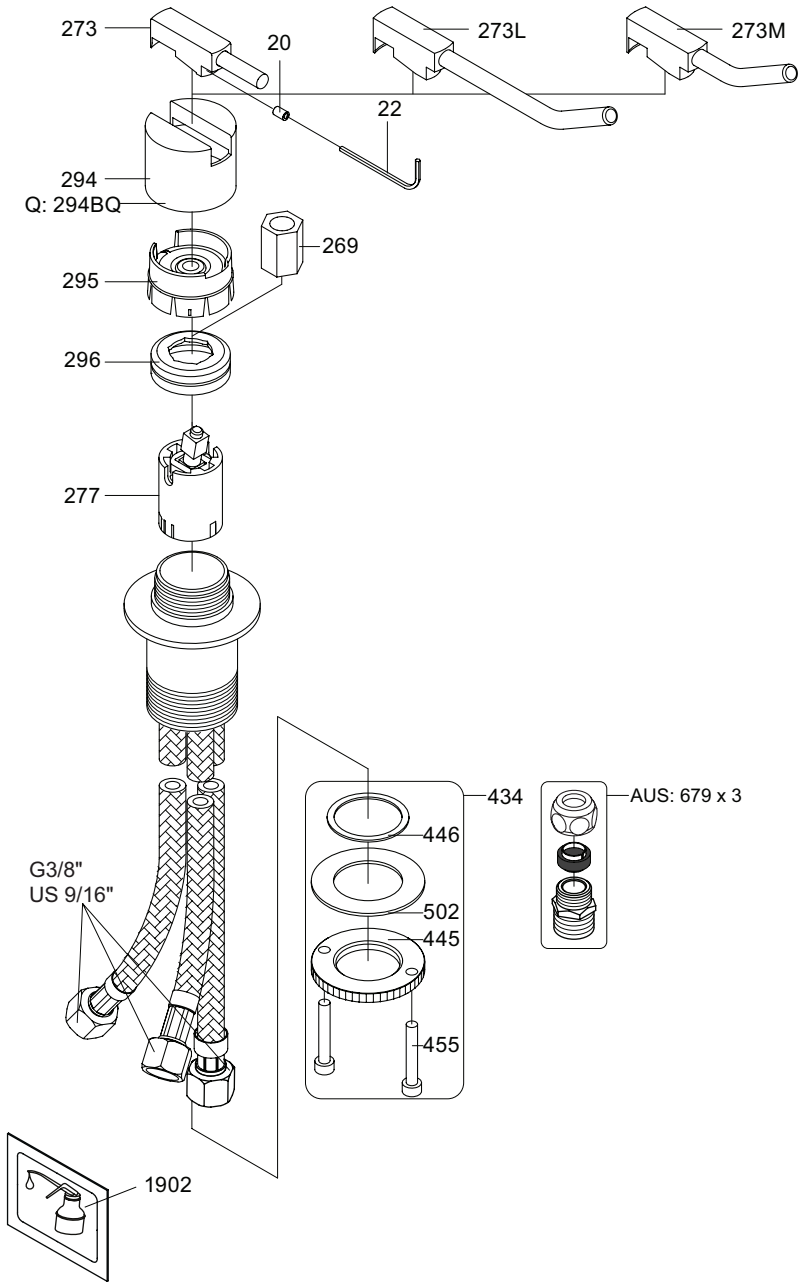

500: Ø10
500US: Ø3/8"

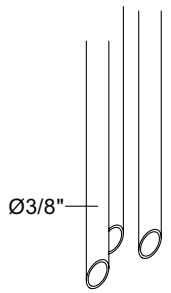

VR277K:	VR22, VR269, VR277
VR297:	VR20, VR22, VR269, VR273, VR277, VR294, VR295, VR296
VR434:	2xVR444, VR445, 2xVR455, VR502
NR.10:	VR20, VR22, VR273, VR294, VR295

vola
Lunavej 2
DK-8700 Horsens
Tlf : + 45 7023 5500
sales@vola.com
www.vola.com

VOLA 500/M/L

Date
Jan. 23

Rev.
4

Sheet
SB 4.1